PFW 6815 Display Wall Mount



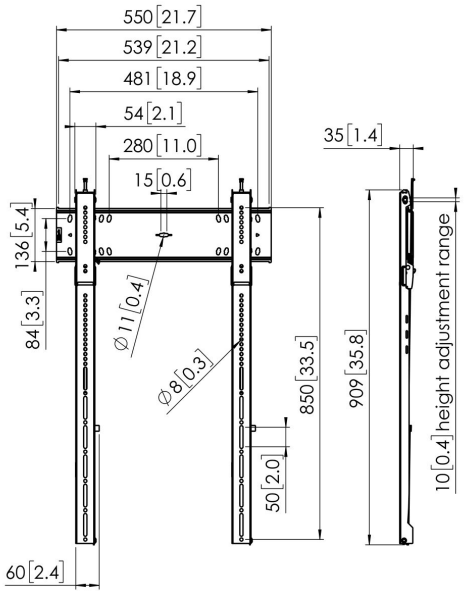

Key Benefits

- Easy levelling and installation
- For the heaviest displays
- Self-centering display bolts
- Integrated lock
- Locked service position

The PFW 6815 is a sturdy and at the same time elegant fixed wall mount for portrait mounting. It features an aesthetically integrated lock whilst maintaining a depth of only 35 mm. The mount can hold displays from 43 to 100 inch, weighing up to 100 kg

PFW 6815 Display Wall Mount



Specifications

Min. screen size (inch)	43
Max. screen size (inch)	100
Min. hole pattern	75mm x 75mm
Max. hole pattern	400mm x 800mm
Min. horizontal hole pattern (mm)	75
Max. horizontal hole pattern (mm)	400
Min. vertical hole pattern (mm)	75
Max. vertical hole pattern (mm)	800
Universal or fixed hole pattern	Universal
Max. height of interface (mm)	906
Max. width of interface (mm)	550
Max. weight load (kg)	100
Max. weight load (Lbs)	220.46
Orientation	Portrait
Service position	Yes
Levelling function	Post-installation horizontal levelling
Lock options	Lock included / integrated
Article number (SKU)	7368150
EAN single box	8712285334207
Colour	Black
Certifications	TÜV
TÜV certified	Yes
Guarantee	5 years

VOGEL'S HOLDING BV (©)

All rights reserved.
Subject to printing errors,
technical and price
amendments.

Date: 2025-05-30

Vogel's. For Sure.