TOUCHSCREENS

INFORMATION



11” PCAP 10pt touchscreen PC with Android, Power over Ethernet Technology, NFC/RFID reader and a RGB LED bar around the screen

The smart and intuitive 11" ProLite TW1125LAS-B3PNR brings intuitive interaction and clear communication to meeting rooms, reception areas and information points. Combining a responsive touchscreen with Android 16, this compact touch panel PC runs applications directly on the device, supporting a wide range of professional uses—from room reservations and visitor check-in to interactive information and digital signage.

An integrated RGB LED bar makes room availability visible at a glance, while the NFC/RFID reader supports contactless check-in, employee authentication and other app-enabled interactions. Built-in microphones and speakers extend its versatility to voice-enabled applications and interactive services. Power over Ethernet delivers power and data through a single cable, simplifying installation and keeping cabling discreet. Flexible mounting in landscape, portrait or face-up orientation allows the display to fit naturally into a variety of environments.

Additionally, it integrates effortlessly with iiSignage², iiyama’s Content Management System (CMS), giving you full control over your messages and advertising, in landscape portrait and face-up position.

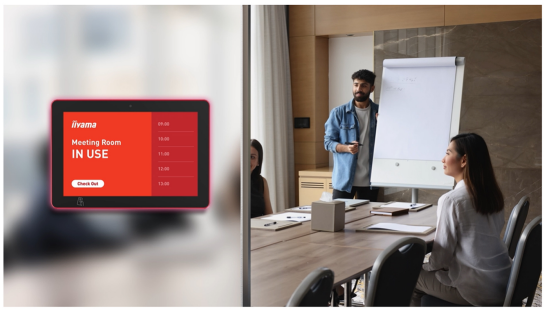

RGB Led bar

The RGB Led bar will clearly and intuitively indicate the room's availability status and can display a wide range of colors.



NFC & RFID reader

Thanks to the NFC/RFID reader, the touch panel PC alows to communicate wirelessly with enabled devices or tags within close proximity.



Connectivity

The RJ45 (LAN) connector supporting Power over Ethernet technology (POE) allows to provide both data connection and power by a single cable, which simplifies installation in areas where many cables would interfere with the environment.



Android OS

Thanks to Android OS, you can easily customize the display to your needs by installing applications directly to it.

SPECIFICATION

01 DISPLAY CHARACTERISTICS

Design	Edge to edge glass
Diagonal	10.95", 27.81cm
Panel	IPS Panel Technology, LED
Native resolution	1920 x 1200 (2 megapixel HD)
Aspect ratio	16:10
Panel brightness	450 cd/m²
Brightness	405 cd/m² with touch
Light transmittance	90%
Static contrast	1500:1 with touch
Response time (GTG)	25ms
Viewing zone	horizontal/vertical: 160°/160°, right/left: 80°/80°, up/down: 80°/80°
Colour support	16.7mln
Viewable area W x H	147.4 x 235.8mm
Pixel pitch	0.1228mm
Bezel colour and finish	black, matte

02 TOUCH

Touch technology	projective capacitive
Touch points	10 (HID, only with supported OS)
Touch method	finger, glove (latex), capacitive stylus
Touch interface	USB

03 INTERFACES / CONNECTORS / CONTROLS

Audio output	Mini jack x1 Speakers 2 x 2W
HDCP	yes
USB ports	x3 (1x v. 3.2 (Gen 1, 5Gbit; DC5V, 900mA), 1x 2.0 (DC5V, 500mA), 1 x USB-C (DC5V, 900mA) video output only)
RJ45 (LAN)	x1 (PoE - IEEE802.3at/max. 24W, 1000M)
Microphone	x1 (Quad microphone)

04 FEATURES

Integrated software	Android 16
CPU	Rockchip RK3576 Octa-Core 4x A53 + 4x A72, up to 2.2GHz
GPU	ARM G52 MC3
Storage	64GB eMMC
Memory	4GB LPDDR5X

WiFi	IEEE802.11ax/ac/a/b/g/n
Bluetooth	5.4
Hardware	NFC (NXP 7221), RFID (125kHZ,9600kbit/s)
Extra	Auto-rotation, SD card slot (microSD), anti-glare coating, PoE, NFC/RFID reader, RGB Led lightbar, slide on wall mount with cable cover
Kiosk mode	yes
Max. non-stop operating time	24/7
Glass thickness	1.1mm
Glass hardness	6H

05 GENERAL

Control buttons	Power switch
Applications	Applications: Bootup timer, calculator, calendar, Chrome, Alarm / clock / Timer / Stopwatch, orginize albums, Gmail, HDMI in, iiSignage2, iiyama player, maps, play store, PwmLightDemo, settings, sound recorder, systemlock
Flicker free	yes

06 MECHANICAL

Orientation	landscape, portrait, face-up
VESA mounting	75 x 75mm, 100 x 100mm
Cable management system	yes
MTBF	50000 hours

07 ACCESSORIES INCLUDED

Cables	power (2.5m)
Guides	quick start guide, safety guide
Other	AC adapter, interchangeable plugs (EU/UK), cable cover/wall mount
Cable cover	yes

08 POWER MANAGEMENT

Power supply unit	external
Power supply	DC 12 V
Power usage	9W typical, 0.5W stand by, 0.3W off mode

09 SUSTAINABILITY

Regulations	CE, EAC, RoHS support, ErP, WEEE, REACH, UKCA
REACH SVHC	above 0.1%: Lead

10 DIMENSIONS / WEIGHT

Product dimensions W x H x D	260 x 171 x 23.5mm
Box dimensions W x H x D	456 x 394 x 236mm
Weight (without box)	1.07kg
Weight (with box)	2.2kg
EAN code	4948570128440

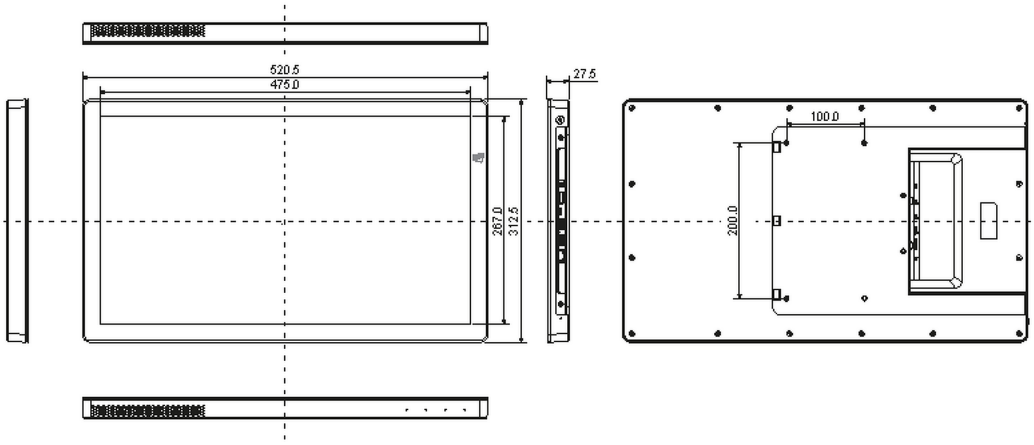

GALLERY


iiyama
ProLite
TW1125LAS
11" TOUCH
RGB


iiyama
ProLite
TW1125LAS
11" TOUCH
1920x1200
RGB
LED BAR


iiyama
ProLite
TW1125LAS
11" TOUCH
1920x1200
RGB
LED BAR


iiyama
ProLite
TW1125LAS
11" TOUCH
1920x1200
RGB
LED BAR


iiyama
ProLite
TW1125LAS
11" TOUCH
1920x1200
RGB
LED BAR


iiyama
ProLite
TW1125LAS
11" TOUCH
1920x1200
RGB
LED BAR





All trademarks and registered trademarks acknowledged. E & O E. Specification subject to change without notice. All LCD's comply with ISO-9241-307:2008 in connection with pixel defects. **© IIYAMA CORPORATION. ALL RIGHTS RESERVED**