TOUCHSCREENS

INFORMATION

Practical and cost-effective 15” touchscreen monitor for commercial and industrial environments

The ProLite T1531SR-B2S is designed for workplaces where touch interaction needs to be simple, reliable and practical. Its 5-wire resistive touch technology responds to almost any suitable input method, including a finger, glove, stylus or pen-like tool. This makes it ideal for environments where users work quickly, wear gloves or need dependable touch operation without relying on bare fingers.

With its IP54-rated front surface, the display is protected against dust and splashing water from the front, making it a strong choice for retail counters, restaurants, workshops, warehouses and light industrial applications.

The monitor also offers flexible analogue and digital inputs with USB touch support for easy integration. An adjustable ergonomic stand and integrated cable management help create a clean, comfortable and professional workspace.

Responsive touch for demanding environments

Resistive touch technology supports input via a finger, a gloved hand, a stylus or other suitable tools. Its durable design makes it a practical choice for a wide range of environments, from retail to restaurants or other applications where a smooth touch experience is

Reliable where conditions get tough

IP54 protection helps the monitor withstand dusty conditions and splashing water from the front, making it suitable for more demanding environments.

Comfortable and versatile use

The single-hinge stand allows smooth screen adjustment for comfortable, versatile use - with built-in cable management to keep your workspace neat.

Enjoy clear, immersive sound

Deliver clear, impactful audio directly from your monitor. Ideal for grabbing attention.

SPECIFICATION

01 DISPLAY CHARACTERISTICS

Diagonal	15", 38cm
Panel	VA
Native resolution	1024 x 768 @75Hz (0.8 megapixel)
Aspect ratio	4:3
Panel brightness	350 cd/m²
Brightness	270 cd/m² with touch
Light transmittance	77%
Static contrast	2500:1
Response time (BTB)	18ms
Viewing zone	horizontal/vertical: 176°/176°, right/left: 88°/88°, up/down: 88°/88°
Colour support	16.2mln (6bit + Hi-FRC)
Horizontal Sync	31 - 60kHz
Viewable area W x H	304 x 228mm
Pixel pitch	0.297mm
Bezel colour and finish	black, matte

02 TOUCH

Touch technology	serial resistive
Touch points	1
Touch method	stylus, finger, glove, glove (latex)
Touch interface	USB
Supported operating systems	All iiyama monitors are Plug & Play and compatible with Windows and Linux. For details regarding the supported OS for the touch models, please refer to the driver instruction file available in the downloads section.

03 INTERFACES / CONNECTORS / CONTROLS

Analog signal input	VGA x1
Digital signal input	HDMI x1 DisplayPort x1
Audio input	Mini jack x1
Audio output	Speakers 2 x 1W
HDCP	yes

04 FEATURES

Extra	anti-glare treatment
Water and dust protection	IP54 (front)
OSD key lock	yes

05 GENERAL

OSD languages	EN, DE, FR, ES, IT, CN, JP, TW
Control buttons	Menu, Scroll up/ Brightness, Scroll down/ Mute, Select, Power
User controls	contrast, brightness, lock mode (power, OSD), auto adjust, OSD, H. position, V. position, H-size, fine, OSD H. position, OSD V. position, OSD timeout, reset, input select, OSD language, colour temperature, volume, mute
Convenience	Kensington-lock™ prepared
Plug&Play	DDC2B

06 MECHANICAL

Orientation	landscape, face-up
Tilt angle	90° up; 5° down
VESA mounting	100 x 100mm
Cable management system	yes
MTBF	50000 hours

07 ACCESSORIES INCLUDED

Cables	power (1.8m), USB (1.8m), HDMI (1.8m), Audio (1.8m), DP (1.8m)
Guides	quick start guide, safety guide
Other	Screwdriver
Cable cover	yes

08 POWER MANAGEMENT

Power supply unit	internal
Power supply	AC 100 - 240V, 50/60Hz
Power usage	16W typical, 1.5W stand by, 0.3W off mode

09 SUSTAINABILITY

Regulations	CE, EAC, VCCI-B, RoHS support, ErP, WEEE, cULus, REACH, UKCA
Energy efficiency class (Regulation (EU) 2017/1369)	E
REACH SVHC	above 0.1%: Lead, Lead monoxide (lead oxide)

10 DIMENSIONS / WEIGHT

Product dimensions W x H x D	351 x 306.5 x 200mm
Box dimensions W x H x D	425 x 410 x 160mm
Weight (without box)	4.1kg
Weight (with box)	5.9kg

EAN code 4948570127665

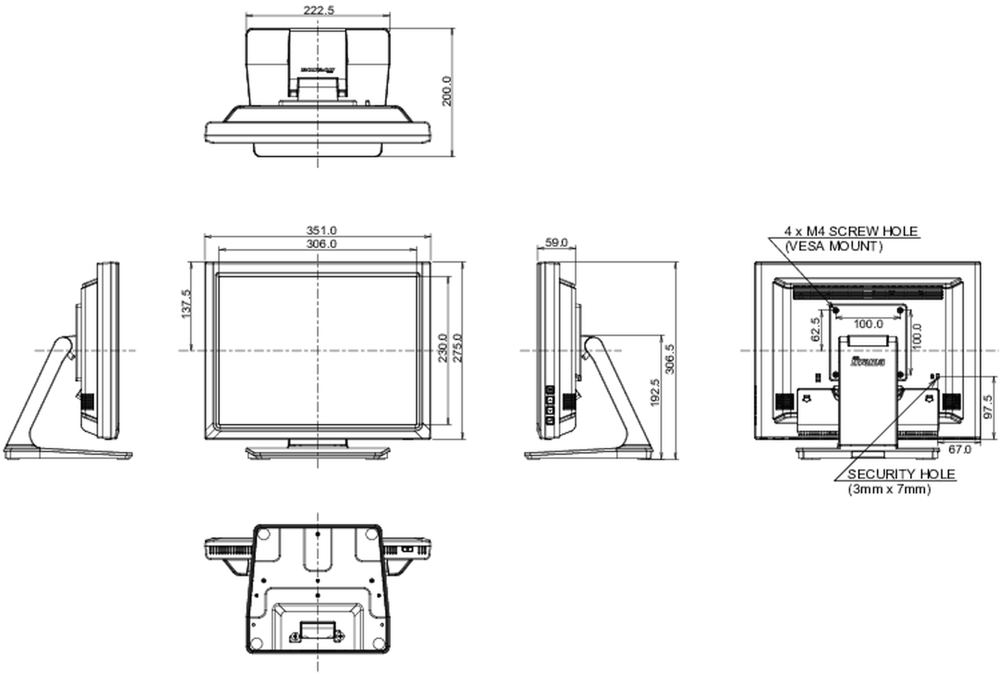

GALLERY

iiyama
ProLite
T1531SR
15"
38cm
TOUCH
RESISTIVE
IP54

iiyama
ProLite
T1531SR
15"
38cm
TOUCH
RESISTIVE
IP54

iiyama
ProLite
T1531SR
15"
38cm
TOUCH
RESISTIVE
IP54

iiyama
ProLite
T1531SR
15"
38cm
TOUCH
RESISTIVE
IP54

iiyama
ProLite
T1531SR
15"
38cm
TOUCH
RESISTIVE
IP54

All trademarks and registered trademarks acknowledged. E & O E. Specification subject to change without notice. All LCD's comply with ISO-9241-307:2008 in connection with pixel defects. **© IIYAMA CORPORATION. ALL RIGHTS RESERVED**