

MOMO 2116W Monitorarm Motion

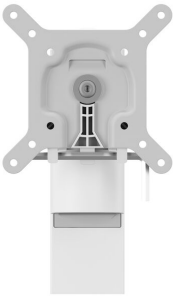

Key Benefits

- Suitable for one, two or a whole series of monitors
- Easy install
- Flexible modular system
- TÜV certified / 10-year guarantee

The ergonomic monitor arm for every workplace The MOMO 2116 is a monitor arm specially designed for wall-mounted monitors. The monitor arm is suitable for monitors up to 43 inches and weighing up to 20 kg.

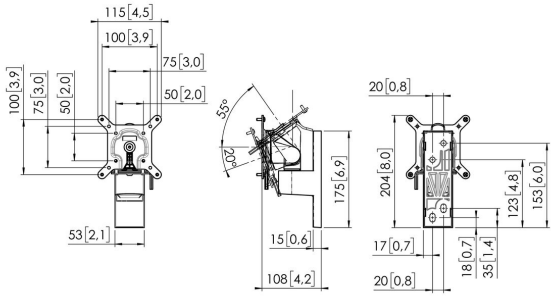

MOMO 2116W Monitorarm Motion

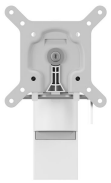

Specifications

Min. screen size (inch)	10
Max. screen size (inch)	43
Max. height of interface (mm)	115
Max. width of interface (mm)	115
Max. weight load (kg)	20
Max. weight load (Lbs)	44.09
Turn	Up to 180°
Number of pivot points	1
Rotate	Up to 180°
Rotation stop	True
Tilt	Tilt -20°/+105°
Adjustable depth	No
Adjustable height	No
Mounting Possibilities	On the wall
Article number (SKU)	7121161
EAN single box	8712285353727
Colour	White
Certifications	IGR TÜV
TÜV certified	Yes
Guarantee	10 years

VOGEL'S HOLDING BV (©)

All rights reserved.
Subject to printing errors, technical and price amendments.

Date: 2025-05-29

www.vogels.com

Vogel's. For Sure.