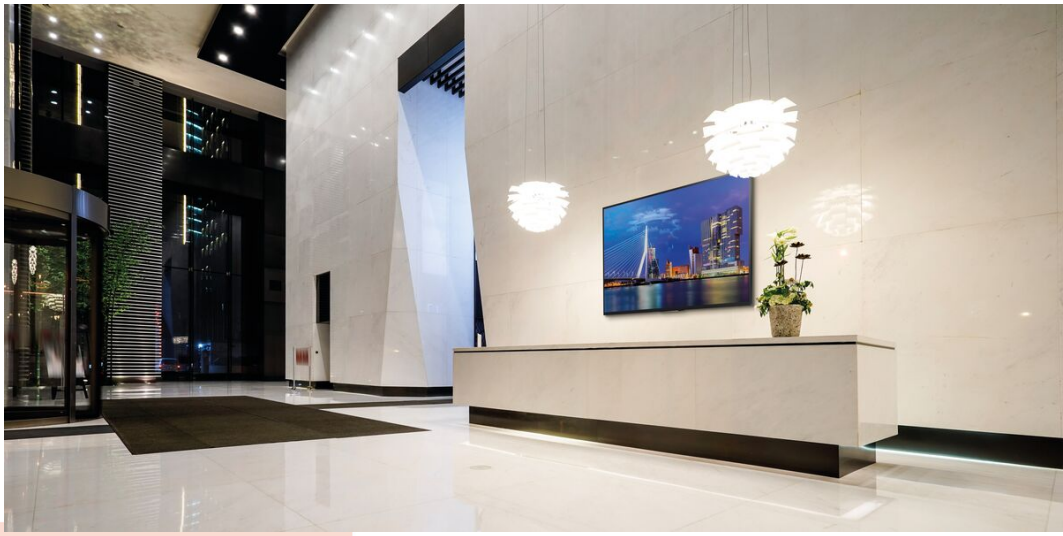

PFW 4510 Display Wall Mount

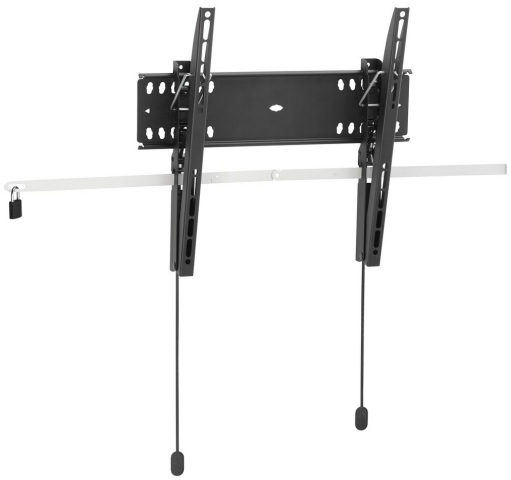

Key Benefits

- Easy to install
- Stylish design
- Theft prevention

This locking tilting wall mount helps protect large flat panel displays in public areas against theft. The PFW 4000 series is designed for public areas that cannot be continuously supervised. For displays mounted high on the wall, tilting the display forward helps create a better viewing angle. The PFW 4510 wall mount, 52 mm deep, can tilt up to 15°, in 0°, 7°, 12° and 15° increments. The PFW 4510 is suitable for 42 to 55 inch displays weighing up to 50 kg.

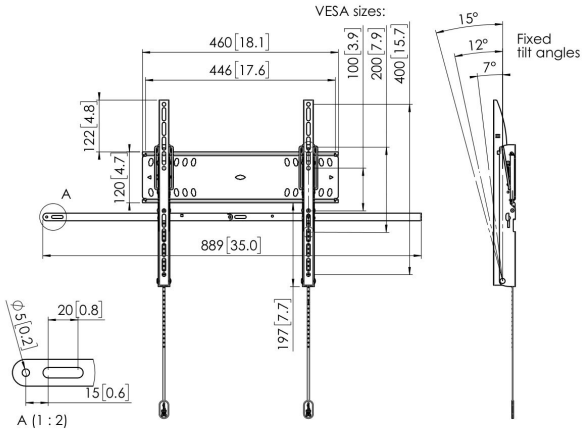

PFW 4510 Display Wall Mount

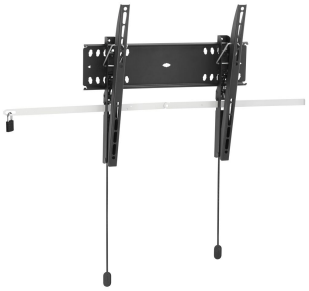

Specifications

Min. screen size (inch)	42
Max. screen size (inch)	55
Min. horizontal hole pattern (mm)	100
Max. horizontal hole pattern (mm)	400
Min. vertical hole pattern (mm)	100
Max. vertical hole pattern (mm)	400
Max. height of interface (mm)	438
Max. width of interface (mm)	460
Max. weight load (kg)	50
Max. weight load (Lbs)	110.23
Tilt	Tilt up to 15°
Orientation	Landscape
Service position	No
Lock options	Lock included / integrated
Autolock	True
Lockable	True
Article number (SKU)	7045100
EAN single box	8712285338625
Colour	Black
Certifications	TÜV
TÜV certified	Yes
Guarantee	5 years

VOGEL'S HOLDING BV (©)

All rights reserved.
Subject to printing errors,
technical and price
amendments.

Date: 2025-05-30

www.vogels.com

Vogel's. For Sure.