FL45-721WH1

NEOMOUNTS FL45-721WH1 SPEAKER STAND FOR SONOS ERA 100 - 85 CM HEIGHT - WHITE

SPECIFICATIONS

GENERAL

Max. weight	3
Distance to wall	25 cm

FUNCTIE

Type	Fixed
Lockable	Not lockable
Height	85 cm
Width	25 cm
Depth	25 cm
Adjustment type	None

INFORMATION

Color	White
Main material	Steel
Warranty	5 year

*Please note: The inch sizes stated are just an indication, combined with the weight and VESA sizes. The maximum weight and VESA size are absolute restrictions for the products and should not be exceeded.





Neomounts FL45-721WH1 Speaker stand for Sonos Era 100 - 85 cm height - floor plate 25 cm - cable management - white

The Neomounts FL45-721WH1 floor stand, engineered for the Sonos Era 100 speaker, helps you to create the best audio experience and slick interior design. Standing at an optimal height of 85 cm, this stand positions your speaker at the ideal ear level for immersive, room-filling sound during everyday listening or home entertainment. Its sturdy 25 cm floor plate ensures exceptional stability on any surface, while the minimalist silhouette seamlessly complements modern living spaces without distracting from your home decor.

The FL45-721WH1 features a smart integrated cable management system that conceals cords out of sight for a clean, wire-free look. Available in versatile black and white finishes to match your hardware and interior preferences, this floor stand offers a secure mounting solution that ensures your Sonos Era 100 delivers optimal acoustic performance.

FL45-721WH1

NEOMOUNTS FL45-721WH1 SPEAKER STAND FOR SONOS ERA 100 - 85 CM HEIGHT - WHITE

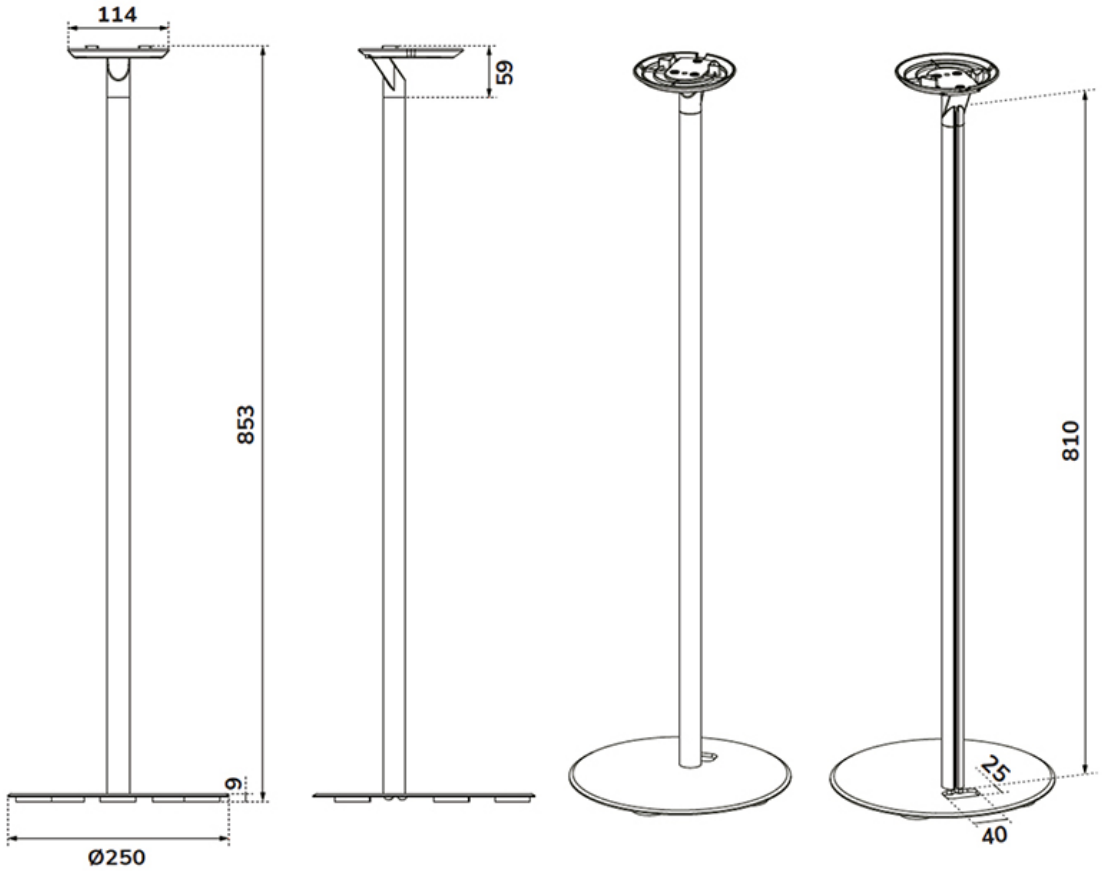

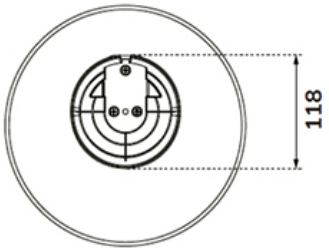

Neomounts

Measuring unit: mm