DS70-810BL2

NEOMOUNTS MONITOR ARM DESK MOUNT

SPECIFICATIONS

GENERAL

Min. screen size*	17 inch
Max. screen size*	32 inch
Min. weight	1 kg (per screen)
Max. weight	9 kg (per screen)
Screens	2
VESA minimum	75x75 mm
VESA maximum	100x100 mm
Desk mount	Grommet Clamp

FUNCTIONALITY

Type	Full motion
Height adjustment	26,5-55 cm
Width adjustment	0-107 cm
Depth adjustment	0-49 cm
Tilt (degrees)	+45°, -45°
Swivel (degrees)	+90°, -90°
Rotate (degrees)	+180°, -180°
Height	61,5 cm
Width	11,7 cm
Depth	55,5 cm
Adjustment type	Gas spring

INFORMATION

Color	Black
Main material	Steel
Warranty	5 year
EAN code	8717371449223

*Please note: The inch sizes stated are just an indication, combined with the weight and VESA sizes. The maximum weight and VESA size are absolute restrictions for the products and should not be exceeded.

Neomounts DS70-810BL2 full motion Monitor Arm Desk Mount for 17-32" screens - Black

The Neomounts DS70-810BL2 is a full motion desk mount for two flat screens up to 32" with a maximum weight capacity of 9 kg per screen. The versatile tilt (90°), rotate (360°) and swivel (180°) technology allows the mount to change to any viewing angle to fully benefit from the capabilities of your screens. Additionally, the mount features gas spring height adjustment (26,5-55 cm) and depth adjustment (0-49 cm), to create the perfect working position. Additionally, the DS70-810BL2 features the nifty 180° stop mechanism, that allows you to safely adjust the mount even when it's placed close to a wall or separation panel without making contact. The smart cable management clips ensure orderly routing of the cables.

Due to the short T-Rex® upper arm, only minimal depth is required when placed near a wall or separation panel.This allows the screens to be positioned further away from the user which is better for the eyes and also leaves more space for good ergonomic working posture. The DS70-810BL2 is suitable for screens that meet VESA hole pattern 75x75 or 100x100mm. Unused hole patterns can be covered using one of Neomounts VESA adapter plates. The DS70-810BL2 is equipped with an Quick-release VESA system for easy installation and comes with both desk clamp and grommet.

Neomounts®

DS70-810BL2 NEOMOUNTS MONITOR ARM DESK MOUNT

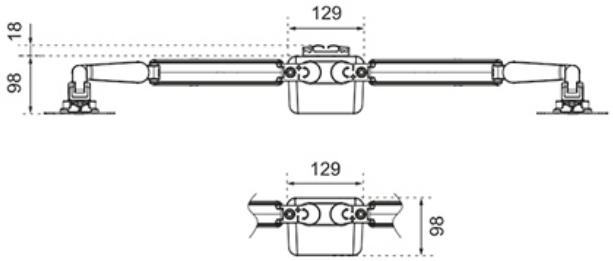

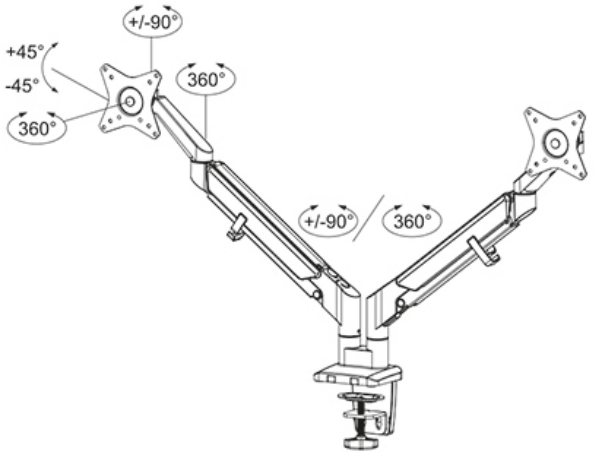

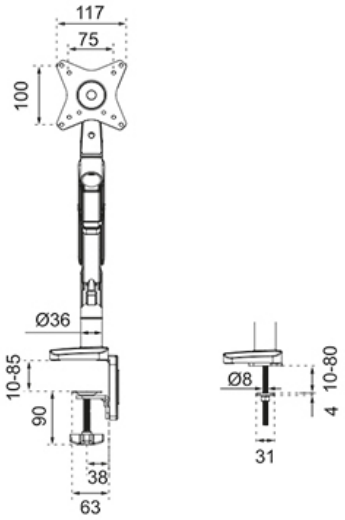

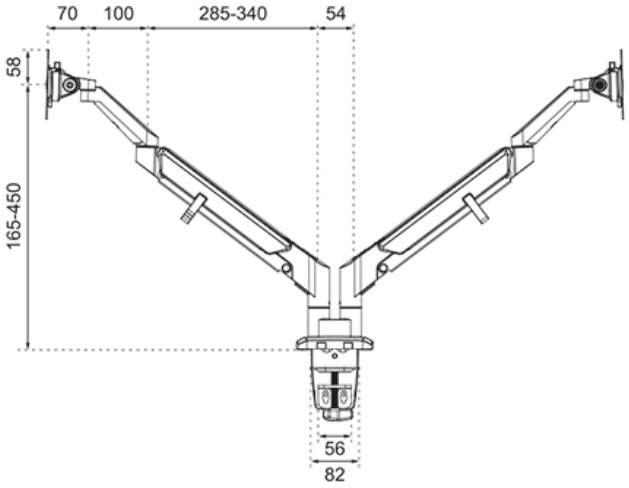

Neomounts

Measuring unit: mm