ERGOTRON®

Dimensional Illustrations

SV10 Laptop Cart

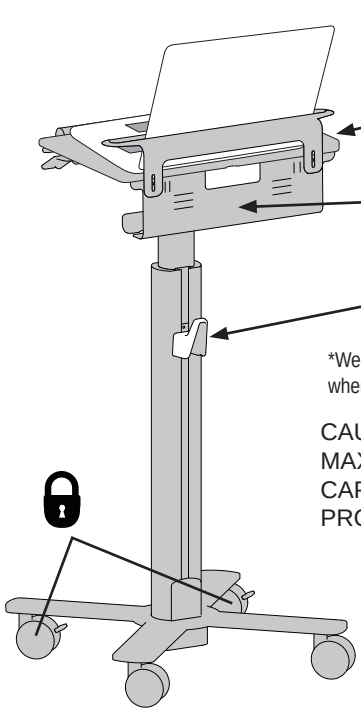

*Weight Capacity for Hook or items mounted to back Slot when Hook or top of load is ≤ 18" (457 mm) from floor.

CAUTION: DO NOT EXCEED MAXIMUM LISTED WEIGHT CAPACITY. SERIOUS INJURY OR PROPERTY DAMAGE MAY OCCUR!

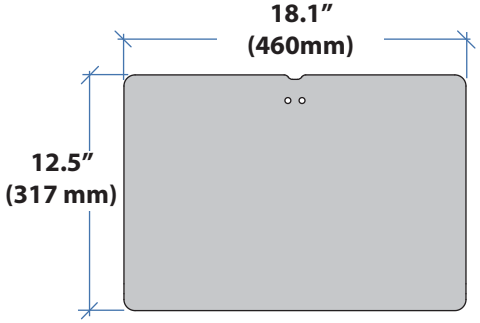

Worksurface

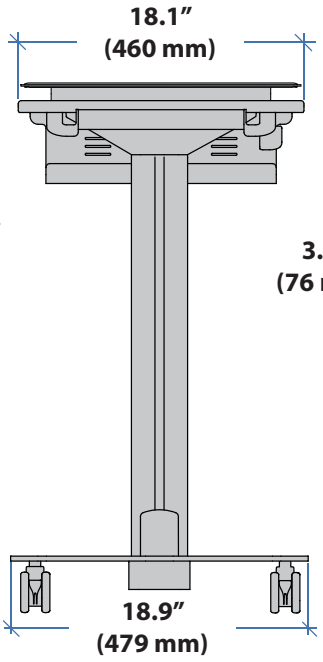

Front View

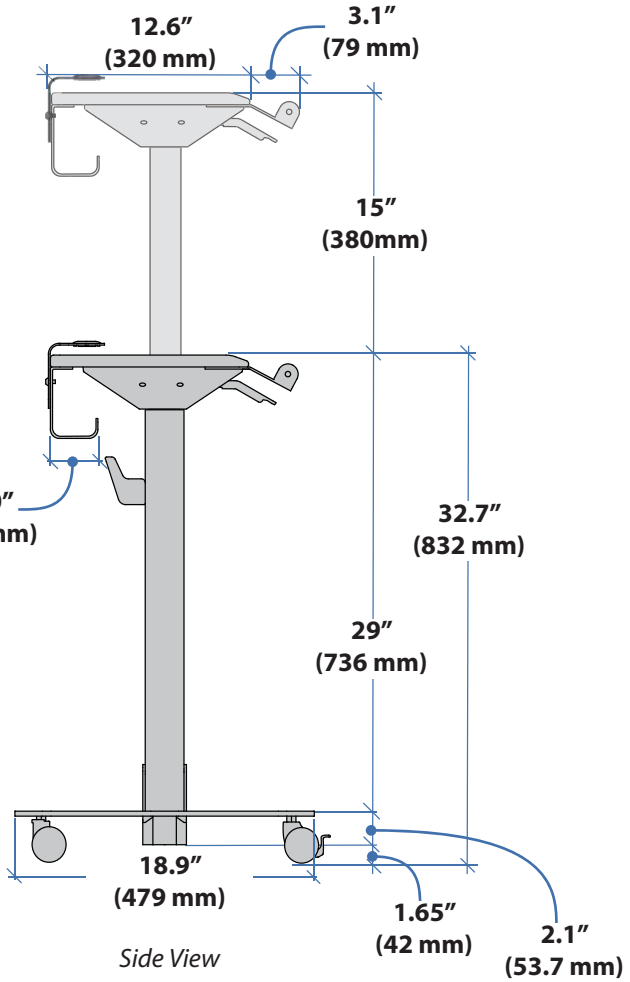

Side View

© 2015 Ergotron, Inc. rev. 07/22/2015 DIM-SV10LaptopCart **Content is subject to change without notification**

Americas Sales and Corporate Headquarters	EMEA Sales	APAC Sales	Worldwide OEM Sales
St. Paul, MN USA (800) 888-8458 +1-651-681-7600 www.ergotron.com sales@ergotron.com	Amersfoort, The Netherlands +31 33 45 45 600 www.ergotron.com info.eu@ergotron.com	Tokyo, Japan www.ergotron.com apaccustomerservice@ergotron.com	www.ergotron.com info.oem@ergotron.com

ERGOTRON®

NORTEK A Nortek Company