AV35-726WH1

NEOMOUNTS AV35-726WH1 TV MOUNT FOR SONOS BEAM - EASY INSTALLATION - WHITE

SPECIFICATIONS

GENERAL

Max. screen size*	75
Max. weight	5
Screens	1
Distance to wall	11 cm
VESA maximum	600x400 mm
VESA minimum	200x200 mm

FUNCTIE

Type	Fixed
Lockable	Not lockable
Height	51,8 cm
Width	34,5 cm
Depth	11 cm
Adjustment type	None

INFORMATION

Color	White
Main material	Steel
Warranty	5 year

*Please note: The inch sizes stated are just an indication, combined with the weight and VESA sizes. The maximum weight and VESA size are absolute restrictions for the products and should not be exceeded.





Neomounts AV35-726WH1 TV mount for Sonos Beam - easy installation - TV-attached design - white

The Neomounts AV35-726WH1 TV mount, engineered for the Sonos Beam soundbar, seamlessly integrates your audio directly with your display for a clean, unified aesthetic. Because the soundbar is attached directly to your television, it moves synchronously with your screen when you use a full-motion or swivel TV mount, ensuring your audio always follows your viewing angle.

Designed with ease of use in mind, the AV35-726WH1 offers easy installation. Available in versatile black and white finishes to match your hardware and interior preferences, this mounting solution ensures that your Sonos Beam delivers optimal acoustic performance.

AV35-726WH1

NEOMOUNTS AV35-726WH1 TV MOUNT FOR SONOS BEAM - EASY INSTALLATION - WHITE

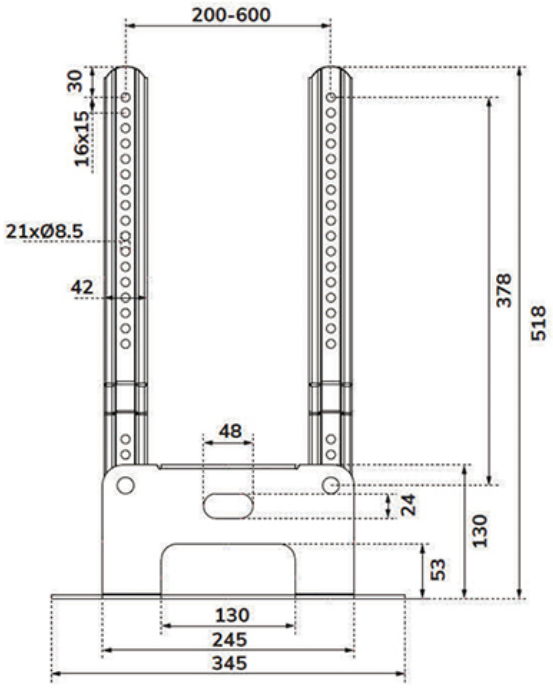

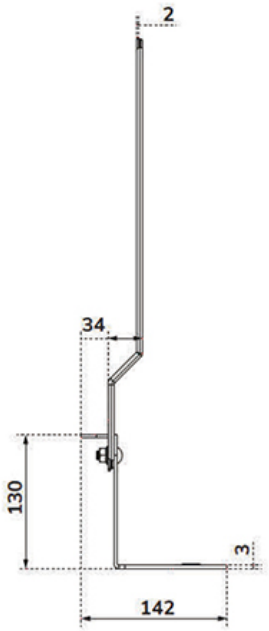

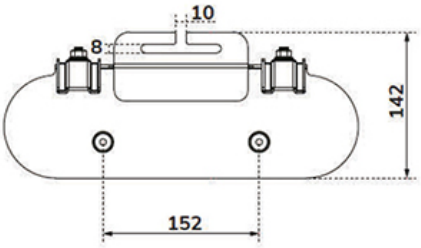

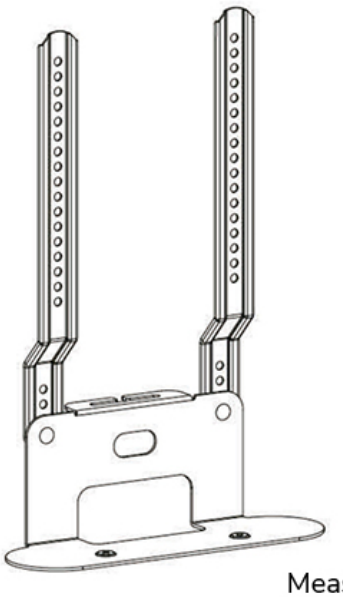

Neomounts

Measuring unit: mm