bento

Certified B Corporation

Warranty 5 years

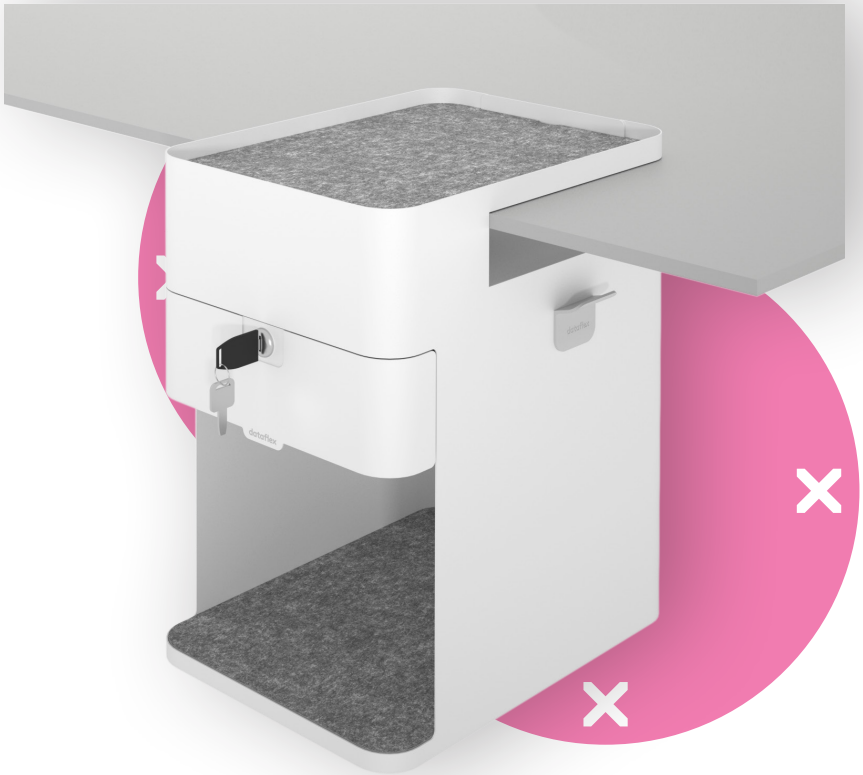

45.500

Bento® desktop locker 500

The innovative Bento® desktop locker is the contemporary successor to the classic file cabinet, redesigned for Activity Based Work environments and modern work. Store your belongings in this beautifully designed personal locker that moves with your sit/stand workspace. Everything within reach, and when you're not at your desk, securely stored in the lockable soft-close drawer. The coat hook also keeps your backpack or (brief)case off the floor, and with the optional USB-A+C fast charger, your devices stay charged and ready for use.

- Maximises usable space around the workstation
- Replaces large and expensive drawer pedestals
- With lockable soft-close drawer
- Quick and easy to place and fix with clamp
- Soft inlays of PET felt protect your belongings
- Made of durable steel for long-lasting reliability
- Open compartment for extra stuff
- Suitable for desktops with a thickness of 5 to 44 mm
- Optional built-in USB-A+C 30W fast charger
- Interior soft-close drawer dimensions (w x d x h): 213 x 310 x 65 mm (12.32" x 10.08" x 3.35")
- Product dimensions (w x d x h): 361 x 254 x 407mm (14.21" x 10" x 16.02")

dataflex

feeling at work

bento

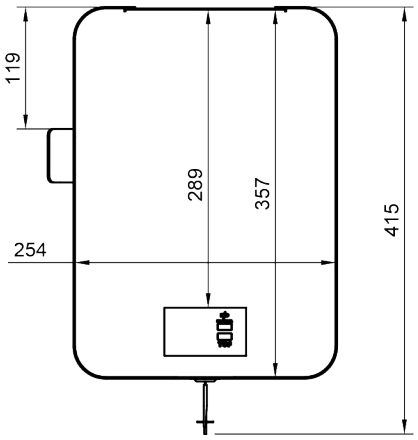

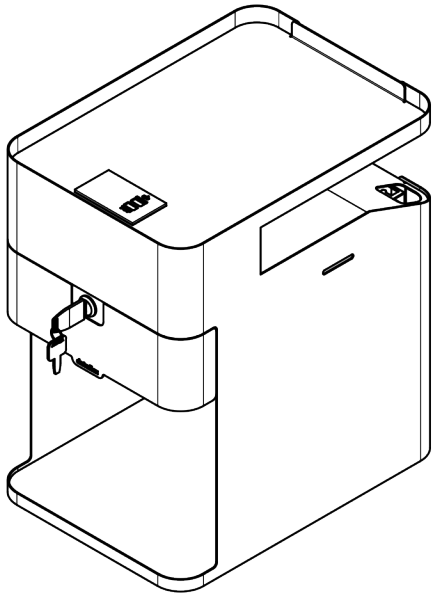

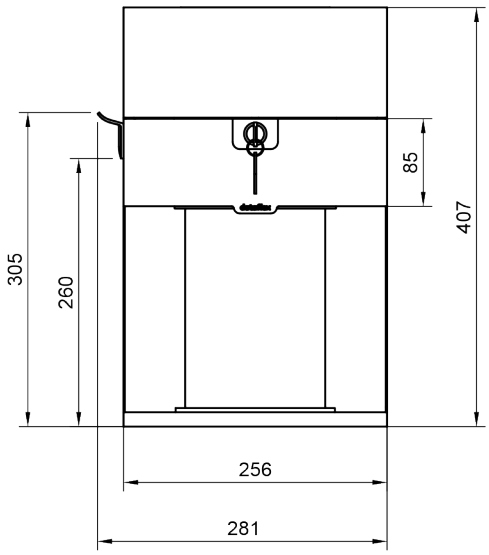

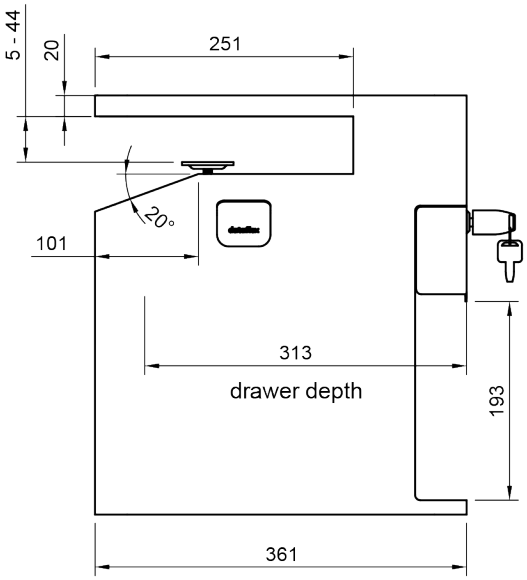

Bento® desktop locker 500 2024/02/01

45.500	490x330x430mm	1 pcs
white	11,86 kg (26,15 lb)	805410455002