WL35S-850BL18

NEOMOUNTS WL35S-850BL18 TV MOUNT WALL 43-86" - TILTABLE - LOCKABLE - FAST INSTALLATION

SPECIFICATIONS

GENERAL

Min. screen size*	43
Max. screen size*	86
Max. weight	60
Screens	1
Distance to wall	3,5 cm
VESA maximum	800x400 mm
VESA minimum	100x100 mm

FUNCTIE

Type	Tilt
Height adjustment	2 cm
Lockable	Lockable - Security screw included
Tilt (degrees)	12°
Height	42,5 cm
Width	88,4 cm
Depth	3,5 cm
Adjustment type	Micro adjustment

INFORMATION

Series	LEVEL 850
Color	Black
Main material	Steel
Warranty	5 year

*Please note: The inch sizes stated are just an indication, combined with the weight and VESA sizes. The maximum weight and VESA size are absolute restrictions for the products and should not be exceeded.

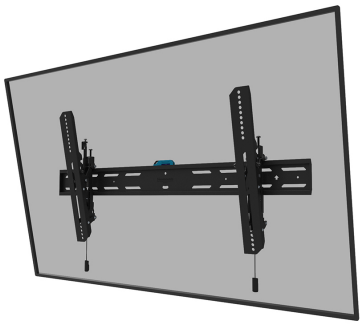

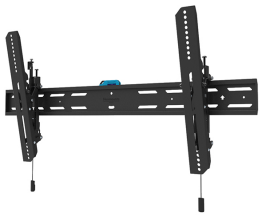

Neomounts LEVEL-850 WL35S-850BL18 Tiltable TV mount wall - 43-86" - max 60 kg - VESA 100x100-800x400 - d 3,5 cm - level adjustment - lockable (incl. security screw, excl. lock) - Rapid Install-model incl. fixing template - black

The Neomounts WL35S-850BL18 LEVEL is a tiltable wall mount for flat screens up to 86" with a maximum weight capacity of 60 kg. Height and level adjustment is available for the perfect installation.

The LEVEL-850 wall mount has a depth of 3,5 cm and is suitable for screens that meet VESA hole pattern 100x100 to 800x400mm. It is possible to lock the wall mount using the included anti-theft screw or a padlock (not included).

The WL35S-850BL18 features a nifty magnetic pull & release system, that allows you to attach the TV in a wink of an eye and secure the TV in safe and solid manner. Afterwards, the pull & release straps can be easily hidden behind the screen by clicking the magnet to the mount. A separate spirit level tool is included with the wall mount, as well as a fixing template, to ensure easy installation of the mount.

WL35S-850BL18

NEOMOUNTS WL35S-850BL18 TV MOUNT WALL 43-86" - TILTABLE - LOCKABLE - FAST INSTALLATION

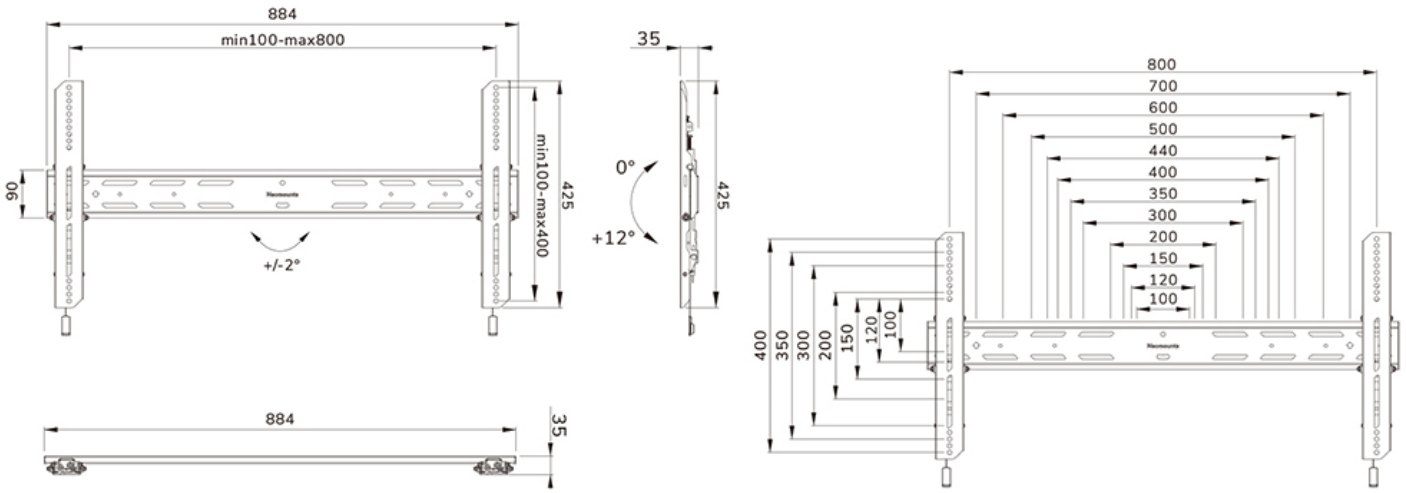

Neomounts

Measuring unit: mm